BRAND SAFWAY™

QES-QUICK ERECT SCAFFOLD & TUBELOX IDENTIFICATION CHART

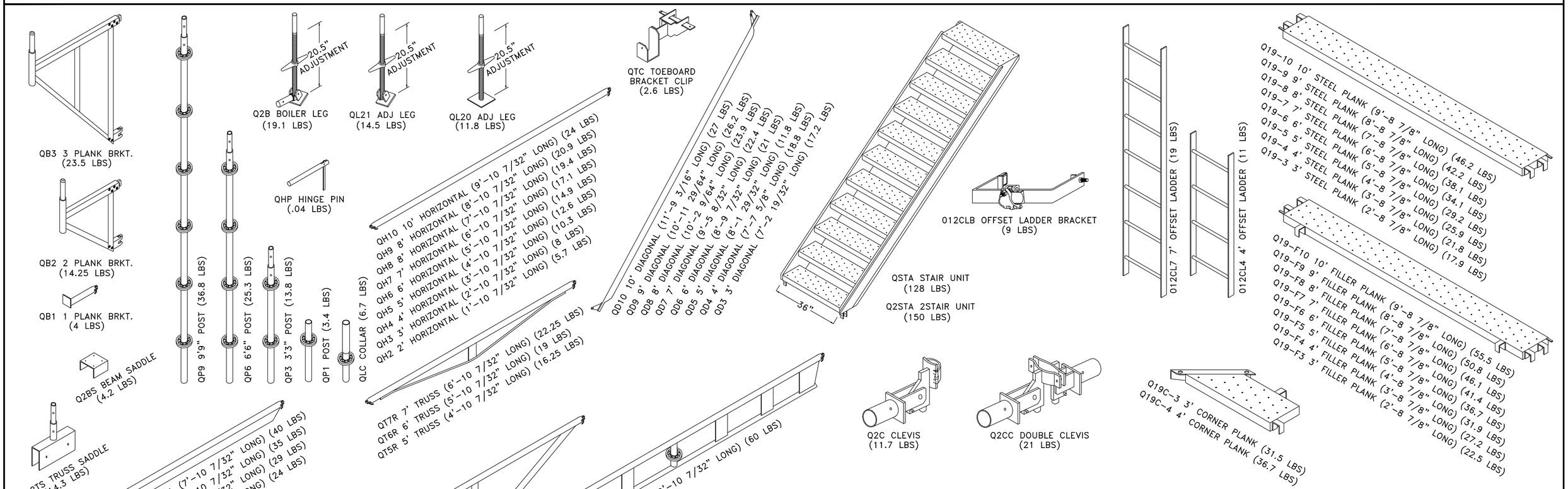

HEAVY DIAGONAL ASSEMBLY SEQUENCE

RANGE – INCHES	HEAVY DIAGONAL PART NO.	& LENGTH	DIAGONAL SCREW PART NO.	& LENGTH	COMMON CONFIGURATIONS BAY SIZE	& # RINGS
33" – 45"	Q2HD-1	22.75"	Q2DS-12	12"	3'	1 OR 2
43" – 67"	Q2HD-2	32.75"	Q2DS-24	24"	4'	1 OR 2
57.5" – 81.5"	Q2HD-3	47.25"	Q2DS-24	24"	3' OR 4' 5' OR 6'	3 OR 4 1 OR 2
73" – 97"	Q2HD-4	62.75"	Q2DS-24	24"	5' OR 6' 7'	3 OR 4 1 OR 2
93" – 117"	Q2HD-5	82.75"	Q2DS-24	24"	7' OR 8'	3 OR 4
104.5" – 128.5"	Q2HD-6	94.25"	Q2DS-24	24"	7' OR 8'	5

TUBELOX

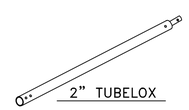

2" TUBELOX

COUPLERS

PART #	DESCRIPTION	WEIGHT	PART #	DESCRIPTION	WEIGHT
ET203	3' TUBELOX	8 LBS	CS002	1-5/8"x1-5/8" STD.	2.75 LBS
ET204	4' TUBELOX	10 LBS	CS004	1-5/8"x2" STD.	3 LBS
ET206	6' TUBELOX	14 LBS	CS006	2"x2" STD.	4.5 LBS
ET208	8' TUBELOX	18 LBS	CS008	2"x2-1/2" STD.	5.5 LBS
ET210	10' TUBELOX	22 LBS	CA002	1-5/8"x1-5/8" ADJ.	3.25 LBS
ET213	13' TUBELOX	28 LBS	CA004	1-5/8"x2" ADJ.	3.5 LBS
ET216	16' TUBELOX	34 LBS	CA006	2"x2" ADJ.	5 LBS
ET220	20' TUBELOX	42 LBS	CA008	2"x2-1/2" ADJ.	5.25 LBS

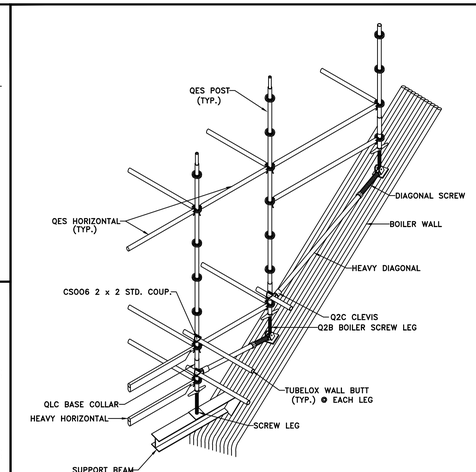

TYPICAL ASSEMBLY - BOILER ACCESSORIES

A	5/28/19
revision	print date